satori®

TW29BN

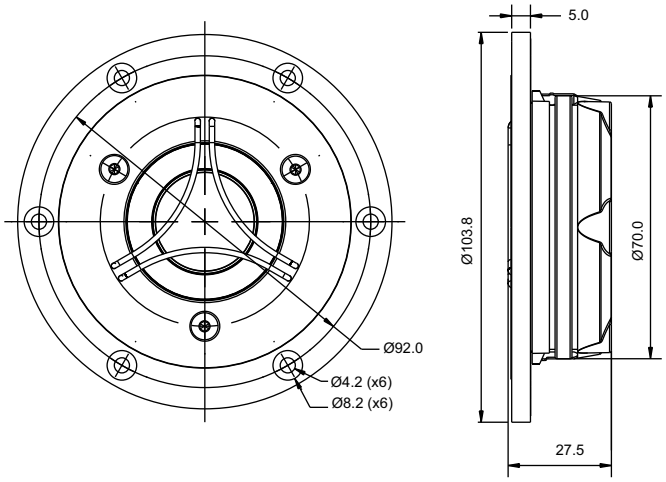

FEATURES

- Beryllium dome for non-resonant high frequency extension
- Two part aluminium faceplate with integrated mechanical decoupling
- Dual balanced compression chambers for improved dynamics
- Dual copper caps for absolute minimum voice coil inductance and minimum phase shift
- High saturation neodymium motor system with T-shaped pole piece for lower distortion
- Non-reflective cast aluminium chamber with optimized damping for improved dynamics
- Shallow flow optimized magnet structure for optimum coupling to rear chamber
- CCAW voice coil for low moving mass
- Long life silver lead wires
- Low resonance frequency for extended range

Specs :

Nominal Impedance	4 Ω	Free air resonance, Fs	700 Hz
DC resistance, Re	3.0 Ω	Sensitivity (2.83 V / 1 m)	95 dB
Voice coil inductance, Le	0.02 mH	Mechanical Q-factor, Qms	2.1
Effective piston area, Sd	9.6 cm^2	Electrical Q-factor, Qes	0.60
Voice coil diameter	29 mm	Total Q-factor, Qts	0.46
Voice coil height	2.0 mm	Force factor, Bl	3.1 Tm
Air gap height	2.5 mm	Rated power handling*	80 W
Linear coil travel (p-p)	0.5 mm	Magnetic flux density	1.5 T
Moving mass incl. air, Mms	0.46 g	Magnet weight	0.11 kg
		Net weight	0.41 kg

* IEC 268-5, high-pass Butterworth, 2600 Hz, 12 dB/oct.

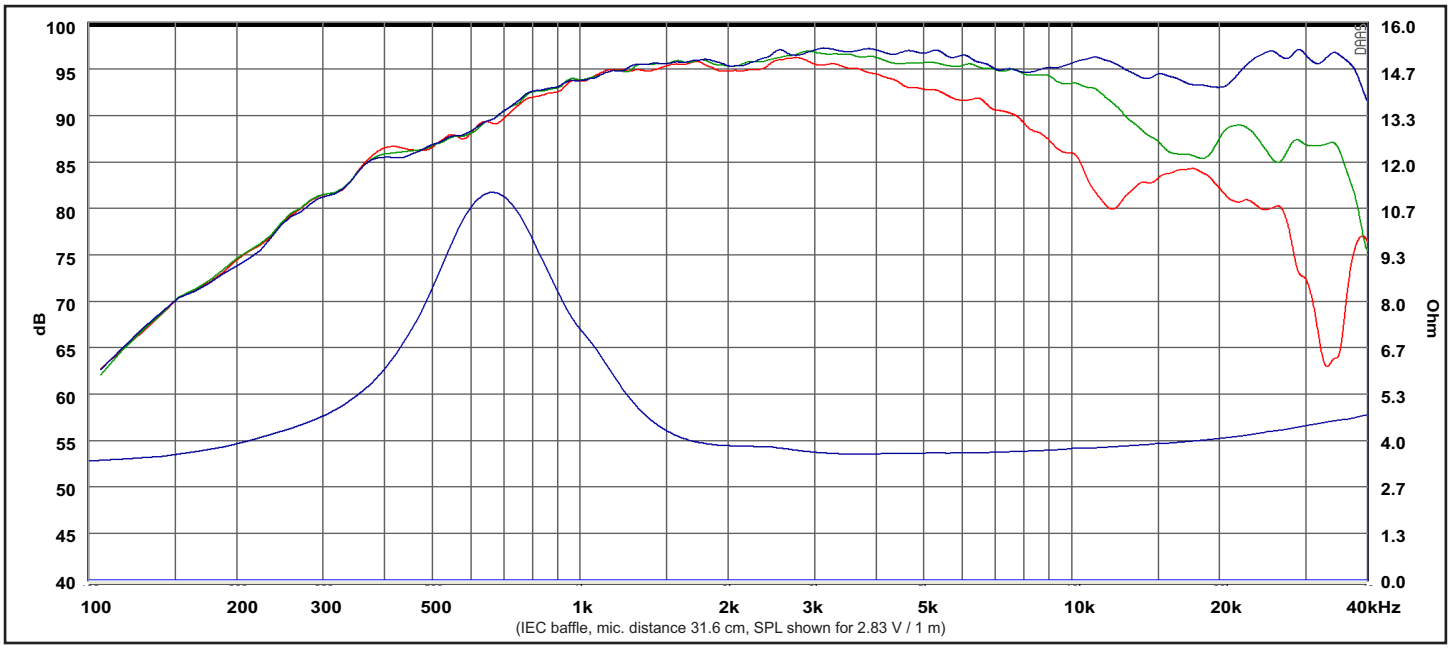

Response Curve :

(Blue) : on axis (Green) : 30 off-axis (Red) : 60° off-axis

REV.0 (12.04.2015)