European Audio Team

INSTRUCTIONS FOR USE

E.A.T. B-Sharp

Dear Music Lover,

Congratulations and thank you for choosing European Audio Products. Your

E.A.T. B-Sharp turntable has been handcrafted and rigorously tested by skilled technicians at the European Audio Team factory to give you years of enjoyable, trouble free service.

Although it may seem like asking for driving directions, please take a few moments to read all of this manual. It has many helpful tips and ideas on properly setting up and using your system. We promise that if you take the time to read and follow these tips you'll get better system performance and enjoyment. Please contact your dealer if you require additional assistance.

The B-Sharp incorporates an array of features that contribute to its audiophile performance:

1. Proprietary ultralow noise AC motor and high precision frequency DC-driven AC generator for speed stability. The motor is fixed on the main chassis. The tonearm and platter are mounted on a separate suspended MDF chassis.
2. The platter with TPE damping and felt mat sits on top of a belt-holding sub-platter. The platter is constructed from an aluminum magnesium alloy sitting on a brass bearing.
3. The tonearm construction is a combinaton of conical carbon fibre tube, sandwich aluminium headshell, cardan bearing in horizontal axle with hardened tips sitting in zircon bowl and ABEC7 ballraces in vertical axle. The counterweight is damped with thermo-plastic elastomer (TPE) damping pad.
4. All key features for cartridge alignment and adjustability are available on the tonearm - VTA/SRA, VTF, azimuth, anti-skate, and a slotted aluminum headshell for overhang and offset angle.
5. The conical thermo-plastic elastomers (TPE) suspension system dampens vibrations.
6. A low-profile sandwich floating chassis made of MDF is what gives this table a "superflat" silhouette.

Important:

Your turntable was shipped partially disassembled in order to avoid damage to sensitive parts. Please check immediately to make sure that neither the packaging nor the device was damaged in transit. If you are missing parts or if the unit is damaged, please do not operate and contact your dealer.

Throughout the manual, this symbol will alert you to potential hazards for the user or the unit, and how to avoid possible misuse.

Contents

Packaging layout 4

Product illustrations and key 5-6

Setup

1. Transport screws 7
2. Platter, sub-platter and drive belt installation 8
3. Adjusting the pulley height 8-9
4. Tonearm assembly 9
    a) Cartridge installation 10
    b) Counterweight assembly 10
    c) Vertical Tracking Force setting (VTF) 11
    d) Tonearm output connection 12
    e) Vertical Tracking Angle setting (VTA) 12
    f) Azimuth setting 13
    g) Anti-skating assembly and adjustment 14-15
5. Leveling the turntable 16
6. Using the record clamp, starting the motor, changing the speed 16

Technical specifications 18

Troubleshooting, warranty, service 19

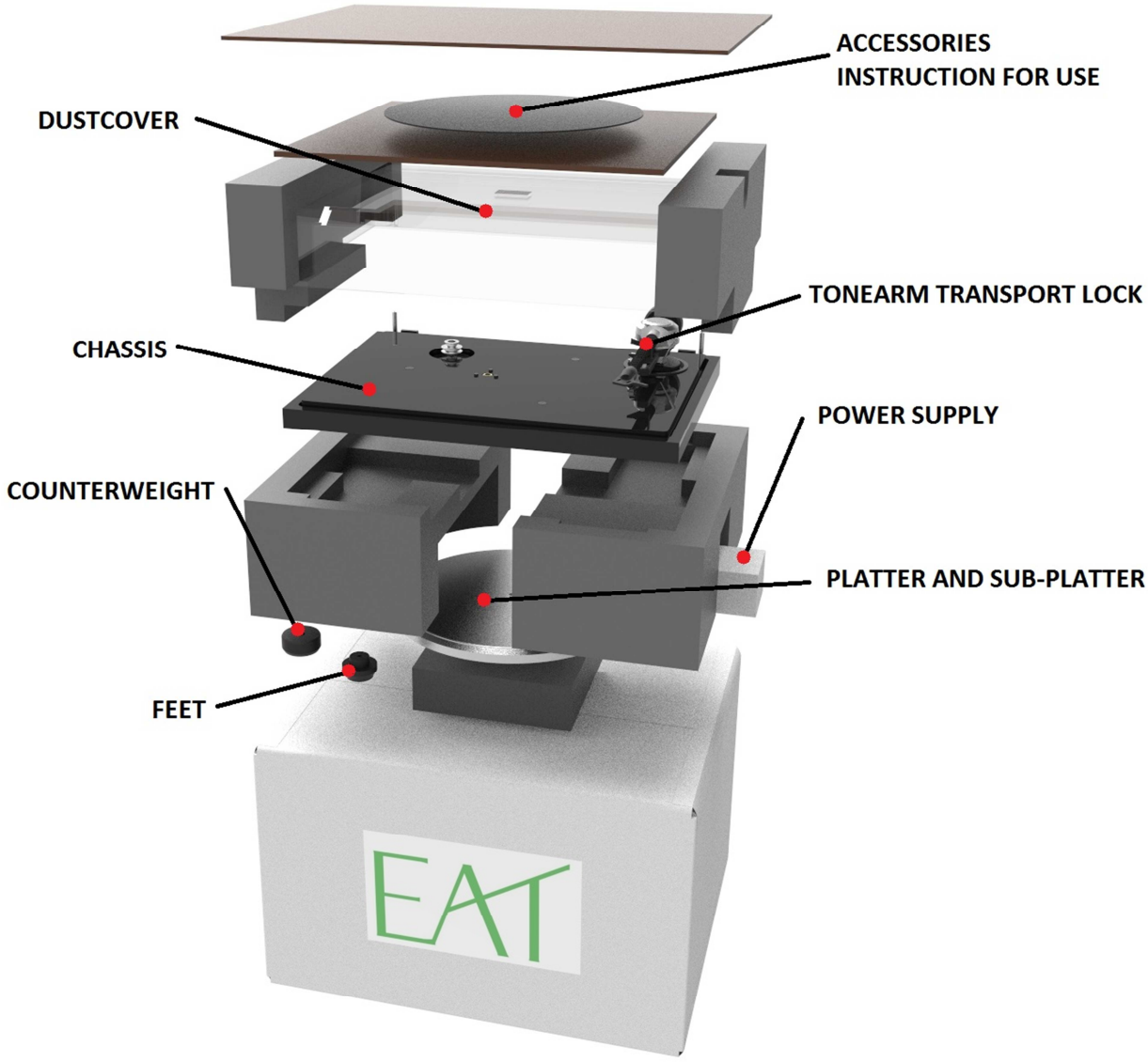

<u>Please do your part to help protect the environment:</u>

Disposal of packaging material

E.A.T. packaging is carefully designed to protect your component from damage in transit and **you are strongly urged to keep the original packaging in order to safely ship or otherwise transport your turntable in the future.**

However, the packaging materials were chosen to be environmentally friendly, so if you must discard the packaging, please recycle.

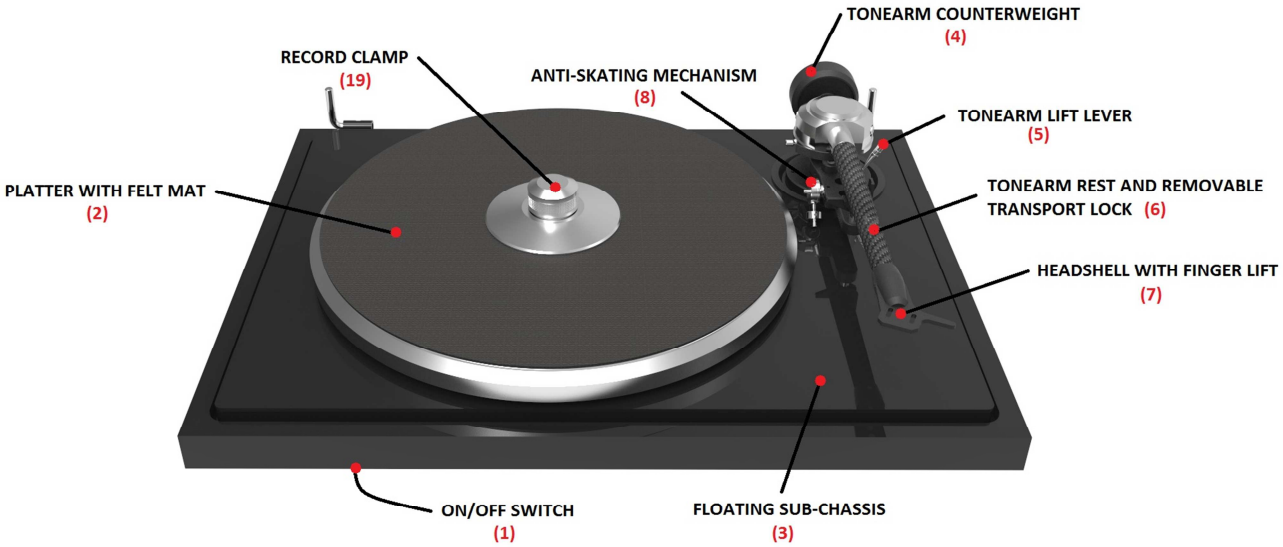
TONEARM COUNTERWEIGHT
(4)
RECORD CLAMP
(19)
ANTI-SKATING MECHANISM
(8)
TONEARM LIFT LEVER
(5)
PLATTER WITH FELT MAT
(2)
TONEARM REST AND REMOVABLE
TRANSPORT LOCK (6)
HEADSHELL WITH FINGER LIFT
(7)
ON/OFF SWITCH
(1)
FLOATING SUB-CHASSIS
(3)

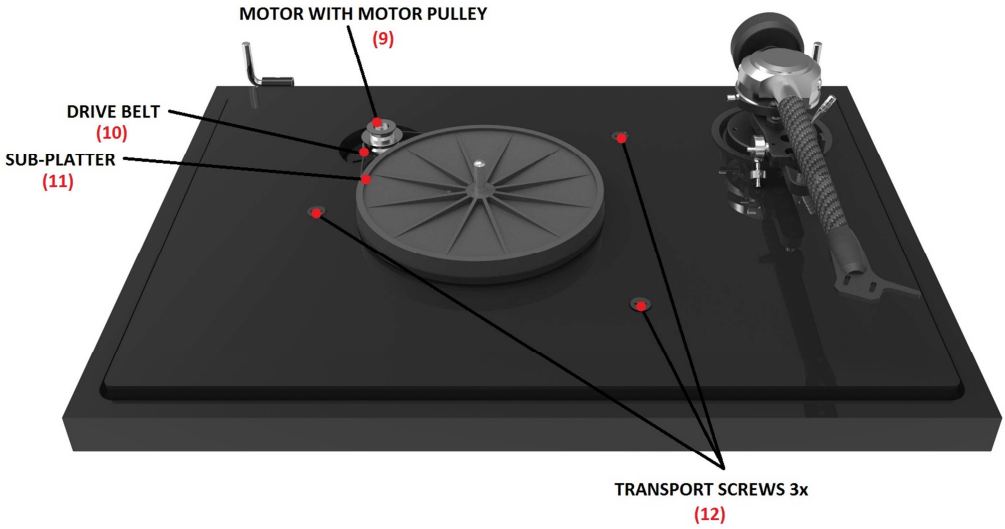
MOTOR WITH MOTOR PULLEY
(9)
DRIVE BELT
(10)
SUB-PLATTER
(11)
TRANSPORT SCREWS 3x
(12)

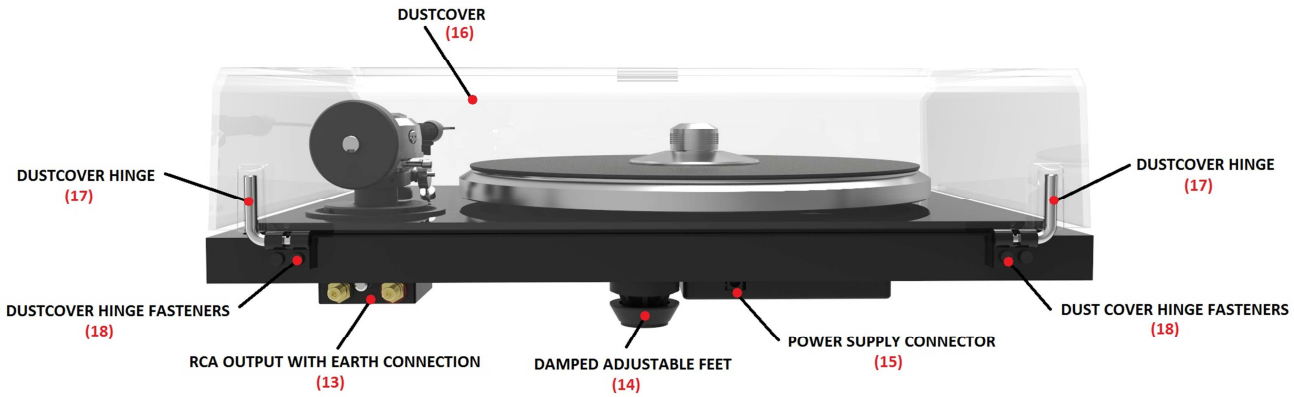
DUSTCOVER
(16)
DUSTCOVER HINGE
(17)
DUSTCOVER HINGE
(17)
DUSTCOVER HINGE FASTENERS
(18)
DUST COVER HINGE FASTENERS
(18)
RCA OUTPUT WITH EARTH CONNECTION
(13)
DAMPED ADJUSTABLE FEET
(14)
POWER SUPPLY CONNECTOR
(15)

KEY: CONTROLS, FEATURES AND CONNECTIONS

1. ON/OFF switch
2. Platter with felt mat
3. Floating sub-chassis
4. Tonearm counterweight
5. Tonearm lift lever
6. Tonearm rest and removable transport lock
7. Headshell with finger lift
8. Anti-skating mechanism
9. Motor with motor pulley
10. Drive belt
11. Sub-platter
12. Transport screws 3x
13. RCA output with earth connection
14. Damped adjustable feet
15. Power supply socket
16. Dustcover
17. Dustcover hinge
18. Dustcover hinge fasteners
19. Record clamp

SETUP

1. Transport screws

Remove the three **transport screws (12)** from the top part of the chassis before installing the **sub-platter (11)**, the **drive belt (10)** and the **platter (2)**.

The transport screws are used to ensure safe shipping and transport, and should be reinstalled prior to any future shipment or transportation of the turntable.

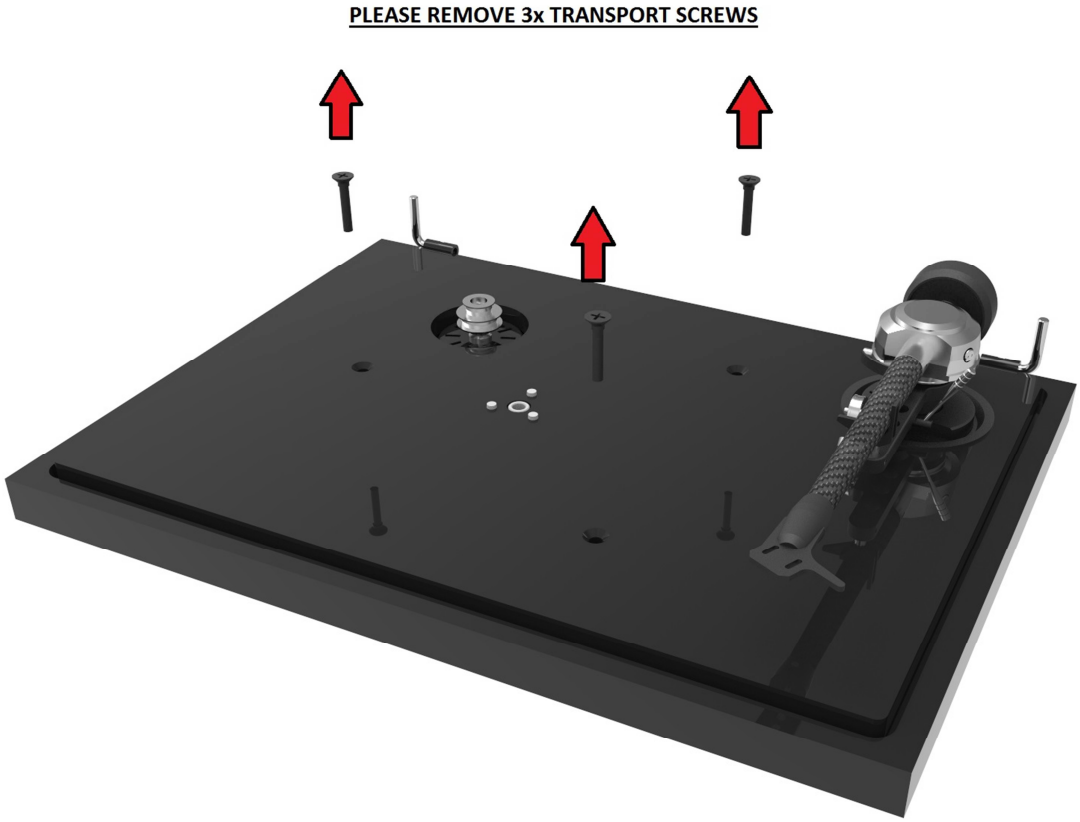

2. Platter, sub-platter and drive belt installation

Remove the protective cover from the **sub-platter (11)**.

Install the **sub-platter (11)** and the **drive belt (13)** as shown in the following illustrations.

Install the **platter (2)** on the **sub-platter (11)** and screw the **Record clamp (19)** with LP on the platter.

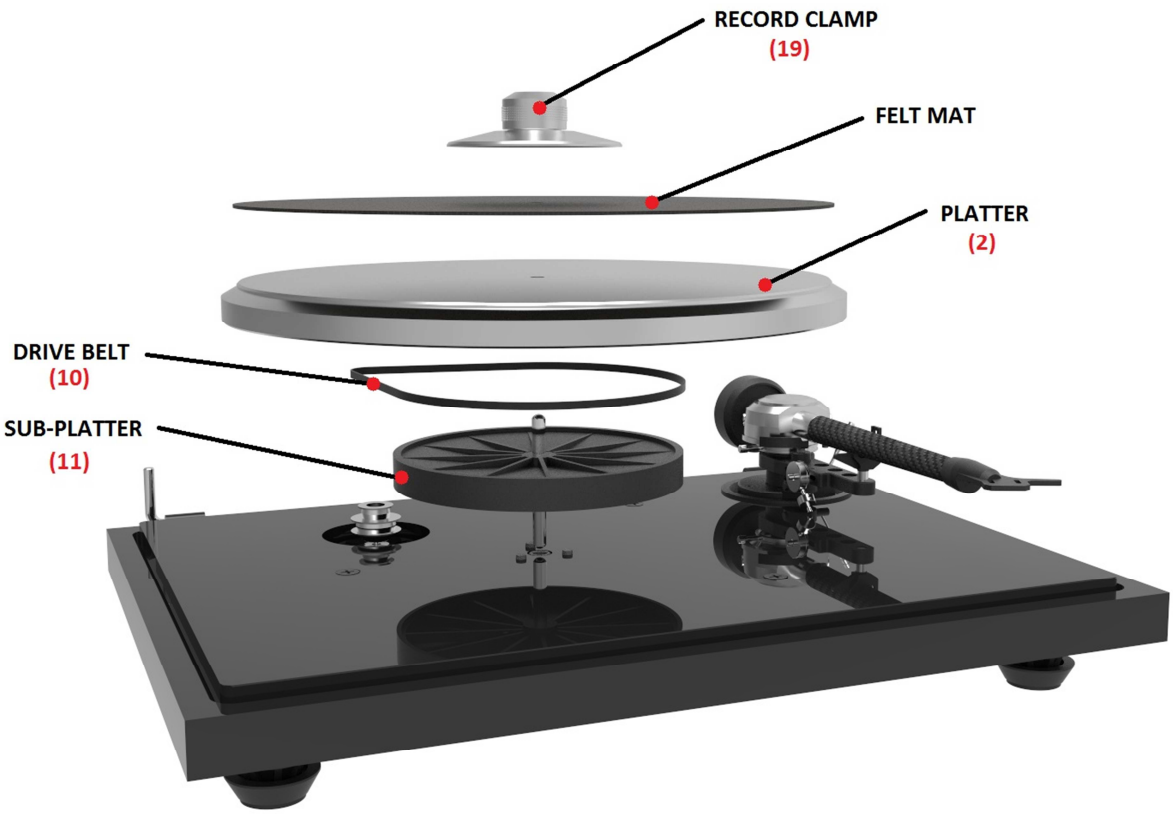

3. Adjusting the pulley height

In rare instances, you may have to adjust the pulley height if it taps against the platter:

Carefully remove platter and drive belt from the turntable. Using a small flathead screwdriver, loosen the small screw and move the pulley to the desired position.

Tighten the screw back and fit the drive belt and the platter.

4. Tonearm assembly

The tonearm includes a combination of cardan bearings in horizontal axle and Japanese ball bearings in vertical axle.

See the next steps to set up your tonearm.

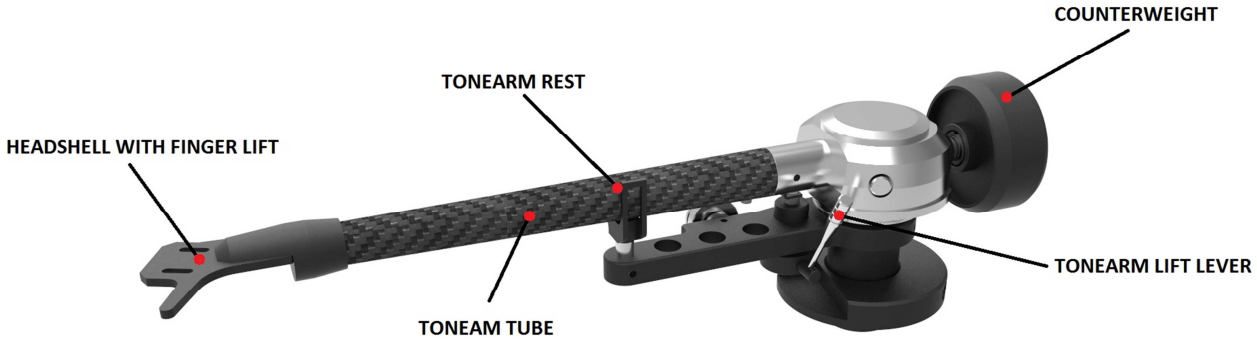

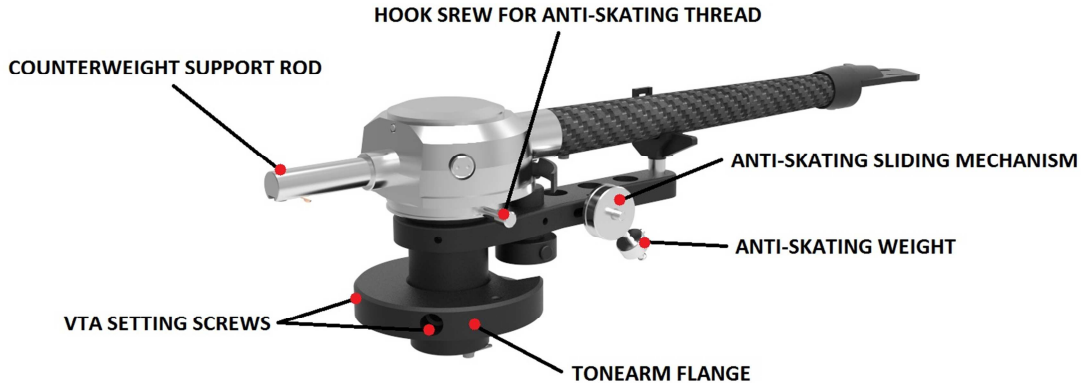

a) Cartridge installation

* If you purchased this turntable in a package that included the cartridge, this has already been done for you.

Install the cartridge into the aluminium headshell, using the appropriate hardware included with your cartridge.

Connect the cartridge as indicated below:

- White left channel L+
- Red right channel R+
- Green right channel R-
- Blue left channel L-

For correct cartridge alignment, use the two-point cartridge alignment protractor provided with your C-Sharp accessories. If unfamiliar with two-point setup, please refer to your dealer.

b) Counterweight assembly

The counterweight has two separate parts:

The first part is the counterweight itself. The second part is an additional insert that enables optimal balancing of heavier cartridges.

The counterweight without the additional insert can balance cartridges **from 5 to 9 g**.
(The weight of the counterweight itself is **110 g**.)

The counterweight with the additional insert can balance cartridges **from 9 to 17 g**.
(The weight of the counterweight with the additional insert is **148 g**.)

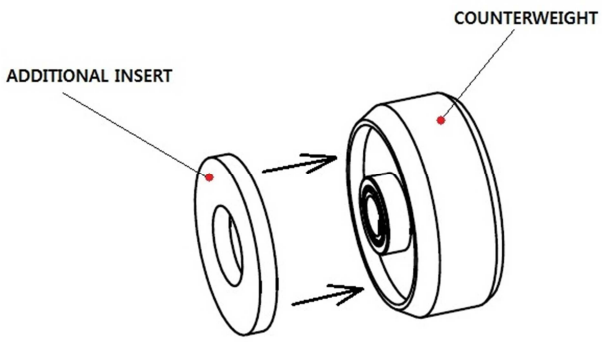

c) Vertical Tracking Force setting (VTF)

Before setting the Vertical Tracking Force, confirm the exact weight of your cartridge. Depending on your cartridge weight, determine whether to use the counterweight with or without the additional insert, in accordance with the specifications above.

Pushing carefully, turn the counterweight onto the rear end of the counterweight support rod as shown in the illustration below. Place the stylus pressure gauge (not supplied) onto the platter. To set the required VTF, lower the tonearm lift lever as indicated in the illustration and place the tip of the stylus on the pressure gauge.

As viewed from the headshell, turning the counterweight counterclockwise (moving it in closer toward the tonearm) increases the VTF, turning clockwise (away from the tonearm) reduces the VTF. Turn the counterweight appropriately until the VTF shown on the pressure gauge matches your cartridge's recommended vertical tracking force specifications.

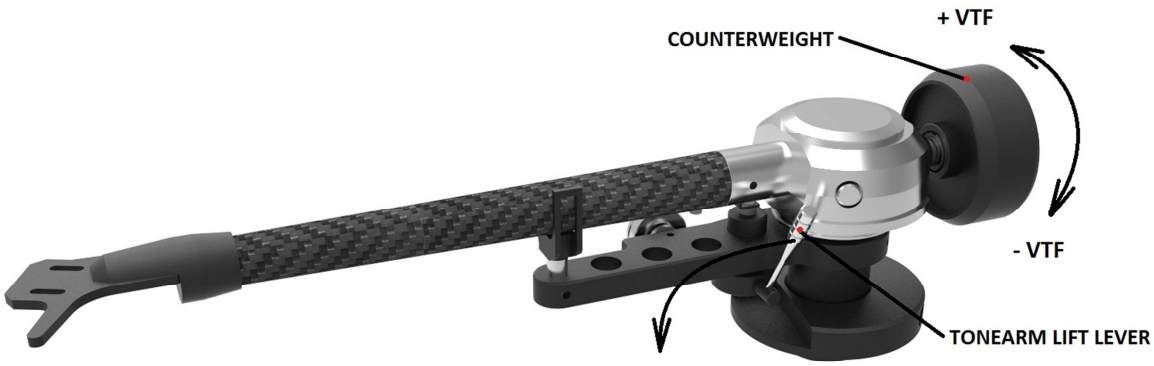

d) Tonearm output connection

Connect the tonearm cable provided with the accessories to the RCA tonearm output that is located at the rear of the turntable, behind the tonearm. Connect the grounding cable on the earth connection screw.

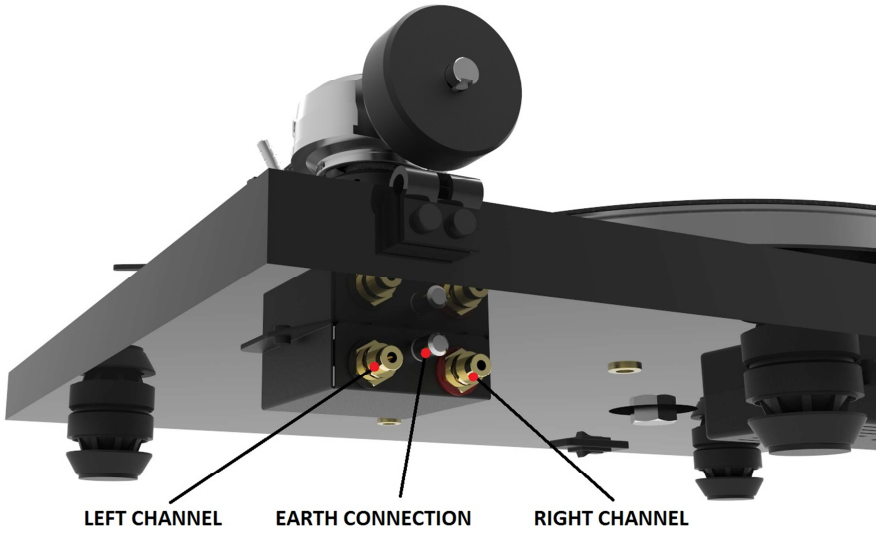

e) Vertical Tracking Angle setting (VTA)

To set the Vertical Tracking Angle, first put a record on the platter. When the needle is lowered into the record groove, the tube of the tonearm should be parallel to the surface of the record. If it is not, loosen both hexagonal screws in the tonearm base just enough to allow vertical movement of the arm pillar without force, and slide the arm up or down until it is parallel.

Carefully and evenly retighten the hexagon screws *without applying excessive force* (which could deform the arm pillar).

f) Azimuth setting

The cartridge needle must be perpendicular to the record in order to trace the groove wall modulations correctly.

The azimuth (angle) is precisely set by the factory. In the event that you need to modify this setting, however, follow the instructions below.

Loosen the small AZIMUTH SET SCREW, again using the 1.5 mm hexagonal key.

DO NOT REMOVE THE AZIMUTH SET SCREW COMPLETELY!

Loosen the screw just enough to be able to gently rotate the arm tube and set the azimuth to the correct position. The correct position can be checked from the front view, preferably with the needle placed on a mirror placed on the platter. Once the azimuth setting is correct, gently re-tighten the AZIMUTH SETTING SCREW.

Examples of incorrect azimuth setup:

Too much left angle:

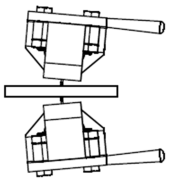

Too much right angle:

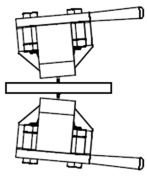

The correct position is 100% perpendicular to the record.

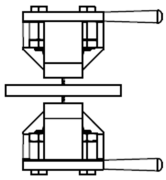

g) Anti-skating assembly and adjustment

The anti-skating mechanism is shipped partially disassembled to avoid damage during transport. For correct installation, please follow the steps below.

Step 1:

Prepare all parts supplied from the accessories bag:

- Anti-skating sliding mechanism with anti-skating weight and thread for mounting on the tonearm

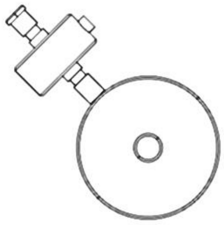

Step 2:

Put the anti-skating sliding mechanism on the end of the anti-skating support rod.

Be careful when handing the anti-skating thread in order to avoid damaging it.

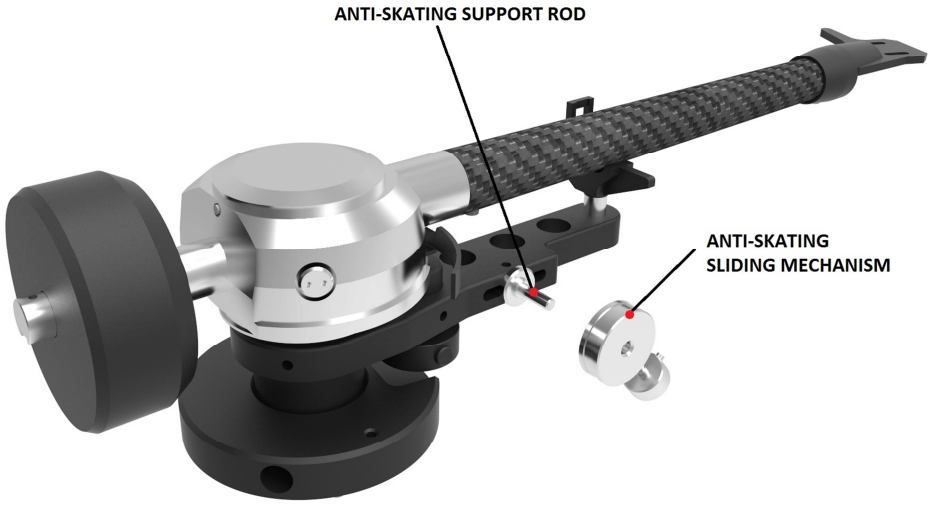

Step 3:

The anti-skating sliding mechanism is supplied with a pre-mounted anti-skating weight and anti-skating thread. Put the eye of the anti-skating thread around the hole for the HOOK SCREW and screw the HOOK SCREW into the tonearm through the eye of the anti-skating thread as shown in the illustration below.

Step 4:

Anti-skating force adjustment:

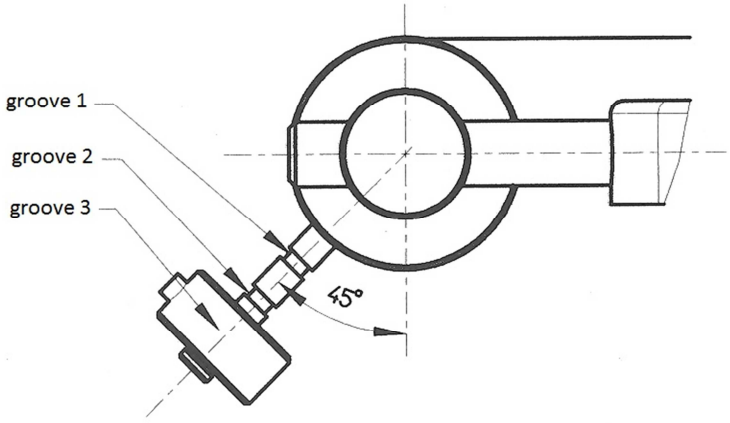

Adjust the anti-skating force by positioning the weight on the appropriate groove of the anti-skating sliding mechanism. Anti-skating downforce should be adjusted in correspondence with the tonearm downforce as follows:

Tonearm downforce:	Anti-skating groove:
Lower than 13 mN or 1.3 grams	1st groove from bearing
13–18 mN or 1.3–1.8 grams	2nd groove from bearing
18–25 mN or 1.8–2.5 grams	3rd groove from bearing

5. Leveling the turntable

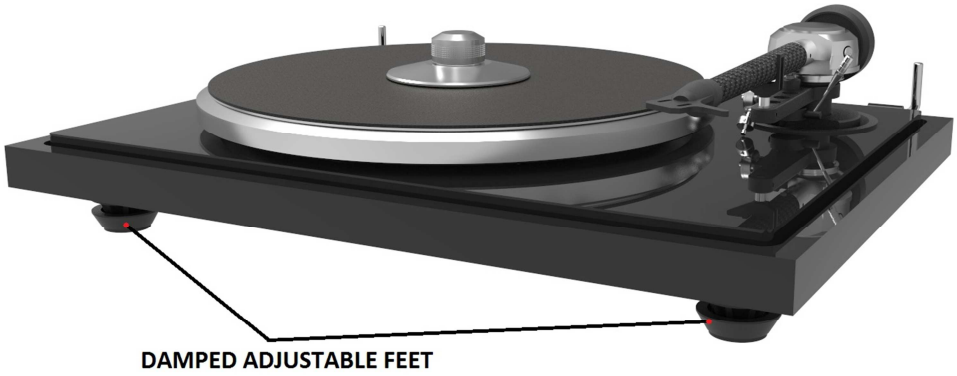

Three precision adjustable damped feet are mounted under the turntable for leveling the turntable. Once the turntable is in final position, put the supplied spirit level on the sub-chassis, and then level the turntable by screwing or unscrewing the feet as needed. It is advisable to check level from several positions on the subchassis.

6. Using the clamp, starting the motor, changing the speed

Using the clamp – after placing a record on the platter, place the record clamp on the spindle and record. Do not screw the clamp for playback.

Controling the turntable:

- To start rotation of the platter, press the button **ON/OFF switch (1**)
- To play 45 r.p.m., put the **drive belt (13)** over the larger diameter part of the motor pulley using accessory toll provided. To revert to 33r.p.m. repeat the proceedings using the smaller step on the pulley.

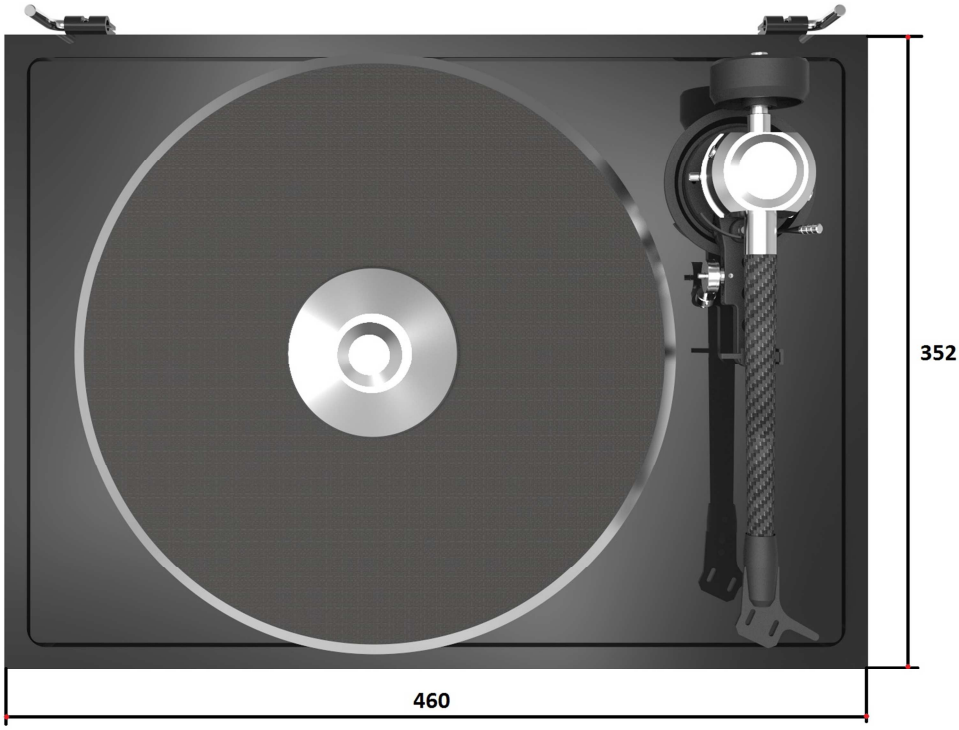
352
460

Model	**B-Sharp**
Nominal speed	**33/45 rpm**, manual speed change
Speed variance	**33rpm: ± < 0.11%, 45rpm: ± < 0.12%**
Wow and flutter	**33rpm: ± < 0.08%, 45rpm: ± < 0.07%**
Signal to noise	**S/N Ratio (mechanical noise): - 40 dB S/N Ration (electrical noise): -68 dB**
Downforce range	**0 - 30 mN** **0 - 3.0 grams**
Supplied counterweight system	Counterweight **125 g** without additional insert → for cartridges **5 - 9 g** Counterweight with additional insert **142 g** →for cartridges **8.5 - 13 g**
Effective tonearm mass	**12.5 g**
Effective tonearm lenght	**230 mm**
Overhang	**18 mm**
Power consumption	**5 W max/ 0.5W standby**
Voltage	Universal swith mode power supply **15 V DC/1.6 A, 90-264 V AC, 47 - 63Hz**
Dimensions (W x H x D)	**460 x 352 x 125mm** without dustcover, **460 x 352 x 142mm** closed dustcover **460 x 380 x 435mm** opened dustcover
Weight (without box)	**8,5 kg** (turntable)
Weight (with box)	**12 kg**

Troubleshooting

The platter doesn't turn although the unit is switched on:

- The unit is not connected to the mains power supply (the building's electrical system).
- No mains power is being delivered at the socket.
- The drive belt is not fitted properly or has slipped off.

No signal through one or both channels:

- No signal contact from the cartridge to the internal tonearm wiring; or from that to the arm lead; or from that to the phono box; or between that and the amplifier. This could be due to a faulty plug, broken wire or loose solder joint in the plug/socket connection.
- Phono input not selected at amplifier.
- Amplifier not switched on.
- Amplifier or speakers are defective or muted.
- No connection to the loudspeakers.

Strong hum on phono input:

- No ground connection from cartridge or arm or arm cable to amplifier, or ground loop.

Distorted or inconsistent sound from one or both channels:

- Turntable is connected to wrong input of amplifier, or MM/MC switch is incorrectly set. Needle or cantilever damaged. Wrong rpm; drive belt overstretched or dirty; platter bearing needs lubrication or is dirty or damaged.

Service

Should you encounter a problem that you are not able to identify or alleviate despite the above information, please contact your dealer for further advice. Only when the problem cannot be resolved should the unit be sent to the responsible distributor in your country.
Guarantee repairs will only be effected if the unit is returned in appropriate packaging. For this reason we recommend keeping the original packaging.

Never return a turntable without making sure that is it properly disassembled and correctly packaged in the original packaging according to the supplied diagram. Please: Remove the feet, counterweight, platter, cartridge and belt and pack them separately. Fit the cartridge protection cap. Insert the transport lock for the tonearm prior to carefully packaging the turntable.

Warranty

The manufacturer accepts no responsibility for damage caused by failing to adhere to these instructions for use and/or by transportation without the original packaging. Modification or change to any part of the product by unauthorized persons releases the manufacturer from any liability over and above the lawful rights of the customer.

The information above was correct at the time of going to press. The manufacturer reserves the right to make changes to the technical specifications without prior notice as deemed necessary to uphold the ongoing process of technical development.

E.A.T. European Audio Team is a Registered Trademark of Jozefina Lichtenegger.

This guide was produced by: E.A.T. European Audio Team. Copyright © 2017. All rights reserved.