SCANSPEAK

Illuminator

18 cm Midwoofer

18WU/8741T00

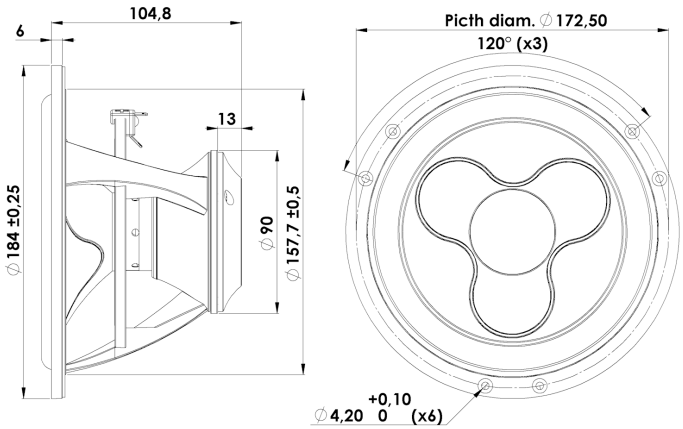

T-S Parameters:	
Resonance frequency [fs]	35 Hz
Mechanical Q factor [Qms]	3.78
Electrical Q factor [Qes]	0.44
Total Q factor [Qts]	0.39
Force factor [Bl]	7.3 Tm
Mechanical resistance [Rms]	1.1 kg/s
Moving mass [Mms]	18.5 g
Compliance [Cms]	1.1 mm/N
Effective diaph. diameter [D]	140 mm
Effective piston area [Sd]	154 cm²
Equivalent volume [Vas]	37.1 l
Sensitivity (2,83V/1m)	85.5 dB

Mechanical Data:	
Voice coil diameter	42 mm
Voice coil height	8 mm
Voice coil layers	4
Gap height	20 mm
Linear excursion	± 9 mm
Max mech. excursion	± 16 mm
Unit weight	1.7 kg
Cabinet Displacement Volume	0.45 l

Electrical Data:	
Nominal impedance [Zn]	8 Ω
Minimum impedance [Zmin]	7.3 Ω
Maximum impedance [Zo]	51.3 Ω
DC resistance [Re]	5.8 Ω
Voice coil inductance [Le]	0.6 mH

Power Handling:	
100h RMS noise test (IEC 18.4)	70 W
Long-term max power (IEC 18.2)	150 W
X-over: None	

Key Features:
Under-Hung Neodymium Motor Design
Patented Symmetrical Drive (SD-3)
Patented Sandwich Paper Cone
Exceptionally Long Linear Excursion
Low-Loss linear suspension
Patented Design
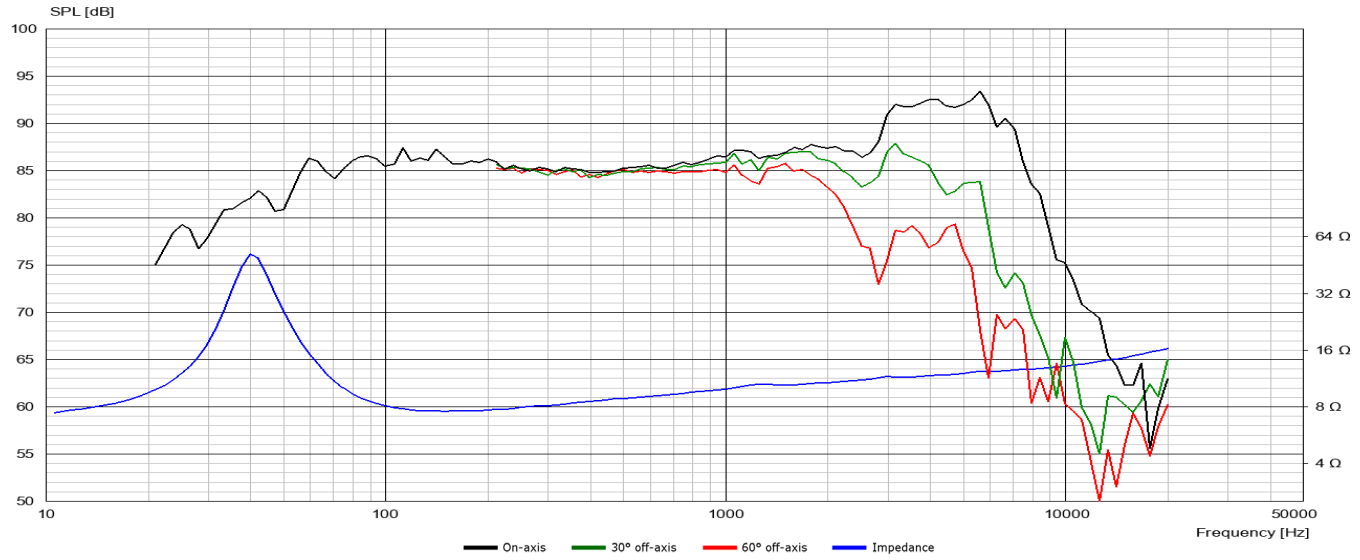
Recommendations (please see Tech Note):	
Operating frequency range:	fs-4000 Hz
Cabinet volume - closed box:	Vbox=19 ltr, f(-3dB)=60 Hz
Cabinet volume - vented box:	Vbox=39 ltr, fb=34 Hz, f(-3dB)=34 Hz